LET'S TALK VIBRATION

Tools for human senses

Atlas Copco

Contents

We take our five senses for granted …

The majority of us wake up every day hearing, seeing, smelling, tasting and feeling. It is not until we experience damage to or the absence of one of our senses that we become aware of how precious they are.

Companies around the world are becoming increasingly aware of risks relating to their workers' health and safety, and the high cost of injuries caused or aggravated in the workplace (including injuries involving machines).

Ergonomics, a central issue

At Atlas Copco Construction Tools, ergonomics has for decades been a central issue when we design new machines. The science of ergonomics addresses the interactions between operators, machines, and the working environment. Transmitted through our human senses, these interactions have a physical impact on the operator, and are thus referred to as stressors.

The aim of ergonomics is to reduce the risk of injuries by reducing the operator's exposure to physical stressors.

Let's talk vibration

This booklet addresses one of the most significant stressors, vibration. It is not intended to be exhaustive or a scientific work. It is simply an overview of various aspects of vibration for people and companies who work with handheld construction machines.

We hope that anyone connected with handheld construction machines – operators, tool purchasers, company management – can gain some benefit from this booklet, if only in a small way.


SKANSKA

Vibration

Wanted and unwanted vibration

Many forms of vibration are desirable. Obvious examples are the movement of a tuning fork, a violin string or the cone of a loudspeaker – all three enable us to enjoy music.

In other situations vibration may waste energy or create unwanted noise or discomfort, and could cause, contribute to or aggravate injuries or disorders. The vibration you are exposed to when using handheld construction machines is commonly referred to as hand-arm vibration.

Sources of vibration

Our equipment is designed to withstand strong forces and rough handling. Oscillating forces acting on the rigid bodies of the machines result in vibration.

The forces come from two different sources. One is the machine itself (process independent forces). This vibration can in many cases be minimized by the machine manufacturer.

The other source is the interaction between the machine and the material being worked on (process dependent forces). This is beyond the machine manufacturer's control.

Vibration from the machine

There are three main sources:

- The forces necessary to accelerate the piston in a percussive machine.
- The imbalance of internal parts in rotating machines.
- The imbalance of inserted working tools.

Vibration from the process

A typical example is when the shock wave from the inserted working tool of a percussive machine is reflected back into the machine body from the material the job is performed on.

The amount of vibration depends on many factors, including:

- The material the job is performed on – for example: concrete, asphalt or rock.
- The skill and experience of the operator in the technique of using the machine.
- The type of inserted working tool used: tamping, cutting, breaking, etc. Also, the condition of the working tool, i. e., if it is sharp or blunt.

Vibration comes from two different sources, one is the machine itself. The other is the interaction between the machine and the material being worked on.

Reducing vibrations by design

For us, ergonomics is a central issue when we design our products. Our aim is to produce machines that reduce the operator's exposure to vibration.

This section of the booklet focuses on our efforts to reduce vibration in our TEX pneumatic breakers and hammers, and our Cobra petrol-driven breakers.

Reducing hand-arm vibration

We have been focusing on reducing hand-arm vibration emission for many years. Our vibration-dampened machines feature a handle design that reduces the level of vibrations that otherwise would (without the vibration-dampening) be transmitted to the operator's hands. To achieve this, the handles are linked to the machine by means of springs that are adjusted to decrease the vibrations.

There are three basic principles for controlling vibrations:

- To control the magnitude of the vibrating forces.
- To make the machine less sensitive to the vibrating forces.
- To isolate the vibrations in the machine from the surfaces of the machine handles or other designated gripping surfaces.

A lot of our machines are marketed with our HAPS® mark, meaning that a selection of vibro-reducing features are present in the machines.

Reducing vibrations in our TEX™ breakers and hammers

In the early 1960s the first step was taken towards developing more ergonomically designed machines. Vibrations were reduced in the TEX range of breakers by allowing the piston to turn on air cushions, thus reducing metal-to-metal contact.

Vibration-dampening handles were first introduced in the mid-1970s on the TEX 25 E breaker. The handle vibrations were dampened by one large spring mounted around the cylinder.

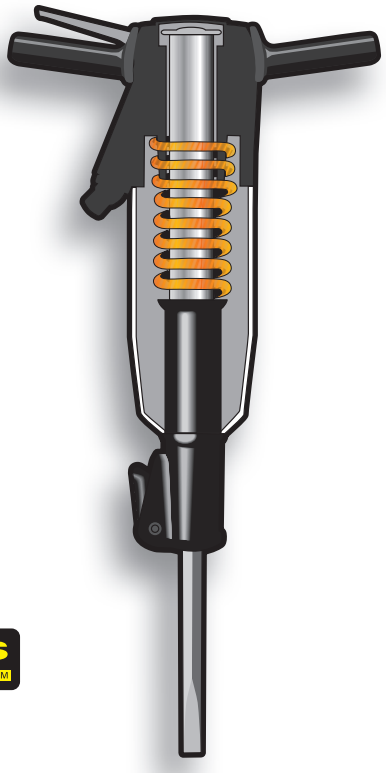

H·A·P·S
HAND AND ARM PROTECTION SYSTEM


SKANSKA
SKANSKA
Atlas Copco
Atlas Copco
H 230E

In the 1980s we took another step towards achieving lower vibration levels by redesigning the construction around the handle. On the TEX 23E two springs were added, one below each handle, pivoting in the center of the machine. See Figure 1.

In the 1990s we continued to focus on the weight relationship between the handle and the body of the machine. In the TEX 23E handle vibration was further reduced by adjusting the relationship between fixed and movable parts.

Today, a third generation of vibration-dampening handles is available. The pivot point is suspended in a flexible construction helping to reduce vibration in all three directions. The suspension system has also been modified. See Figure 2.

For hammers, we have developed a unique system where the cylinder is suspended in a specially designed flexible cradle.

The design of the TEX hammers is unique and is part of our ongoing design work to further enhance the development of more ergonomic construction equipment.

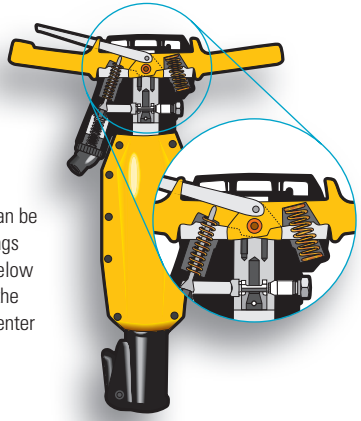

Figure 1: Here it can be seen that two springs were added, one below each handle, with the pivot point in the center of the machine.

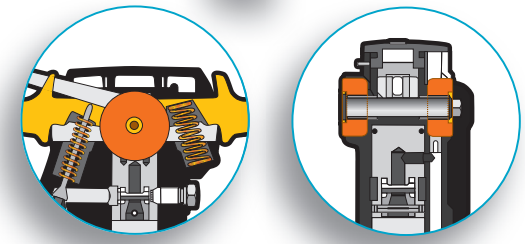

Figure 2: The third generation of vibration-dampening handles. The pivot point is suspended in a flexible construction.

Reducing vibrations in our Cobra™ petrol driven breakers

In the late 1970s we introduced a method of reducing vibrations emitted by its petrol-driven breakers.

It was a two-part solution. Firstly, the machine was equipped with handles in a vibration dampening material. Secondly, a robust spring system isolated the handles from the movements of the percussion mechanism.

In 1997 our introduction of the Cobra Mk-1 represented a revolution in vibro-reduction. The machine resulted in us being one of the winners of the Queen's award for enterprise in the class "Innovation" in the United Kingdom in 2006. The new design of the machine offered:

- Reduced vibration levels
- Reduced exhaust emissions
- Increased operator comfort
- Increased portability

The patented vibration-dampening system features leaf springs rather than rubber bushings or spiral springs. The leaf spring suspension system significantly reduces vibrations. Two leaf springs enable the breaker to move freely inside the frame where the handles are mounted.

In addition, all moving parts are carefully balanced to create a minimum of movement.

The revolutionary design of our Cobra Mk-1 petrol-driven breaker, today's model is called the Cobra Pro, resulted in a major reduction in vibration.

How you can reduce the risks

We strive to improve our machines' ability to reduce the amount of vibrations transferred to the operator. However, process dependent forces and other factors are beyond our control. If you work with these machines, please note the following valuable tips.

You can reduce the risks of injury by:

- Using vibration-reduced machines.
- Letting the machine do the job.
- Using the right machine for each job.
- Checking machines before using them to ensure they have been properly maintained and repaired.
- Not keeping the trigger engaged while extracting the inserted working tool from the broken work surface.
- Making sure inserted working tools are kept sharp so that they remain efficient.
- Stopping work immediately if the machine suddenly starts to vibrate strongly.
- Taking regular breaks.
- Switching to work tasks that involve less or no vibration.
- Avoiding gripping the machine harder than you have to.
- Encouraging good blood circulation, for example by:
  - keeping your hands warm and dry
  - massaging and exercising your fingers during work breaks.

A useful tip: Let the machine do the work
Our vibration-dampened machines have pre-stressed spring handles. If you push down too hard on them, you hit a stop and lose the effect of the springs. Press them half-way down, and the right amount of feed force is applied automatically. Allow the machine to "float" between the handles.

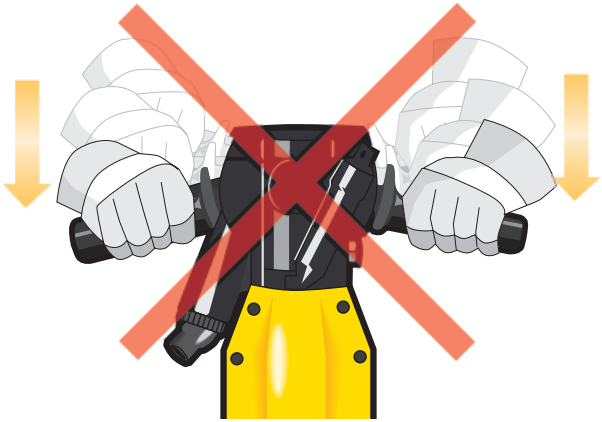

Laws, regulations and measurements

There are many laws and regulations that impose requirements on machine manufacturers. But in many countries there also are laws and regulations that impose requirements on the operator's employer.

This chapter of the booklet briefly discusses various European Union regulations (the Machinery Directive 2006/42/EC and the Physical Agents Directive 2002/44/EC, which is often referred to as the "Vibration Directive") that are part of the regulatory framework in Europe.

How to measure vibrations

Vibration is the oscillating motion of an object caused by forces acting on it. These forces have different frequencies, depending on their source. The frequency, measured in Hertz (Hz), is the number of times a complete motion cycle takes place during one second. The severity of the vibration is known as its amplitude.

Single-axis versus three-axes measurement

There are two ways of measuring vibration emissions, single-axis[1] vibration and three-axes vibration. When the vibration is measured on just one axis, it should be measured at the point where the vibration level is highest.

In a real work situation, vibration in all three axes affects the operator, and a three-axes measurement is more accurate. The three-axes vibration emission value combines the vibration values measured in three orthogonal directions, x, y and z, at the point where vibrations enter the hands:

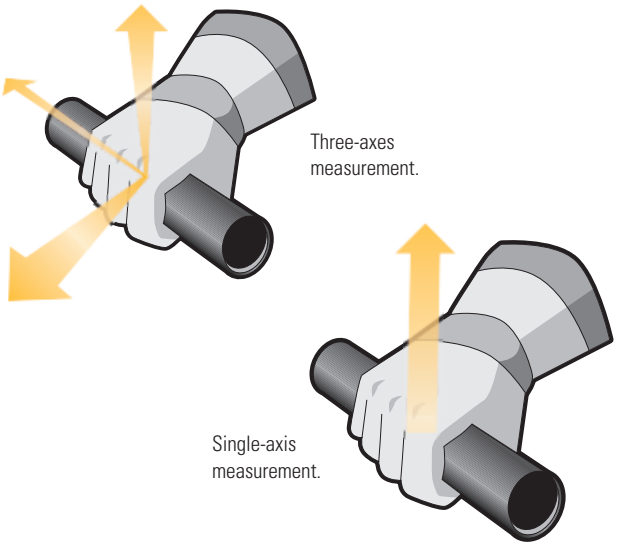

This booklet mentions only European Directives, not the EU countries' national regulations that implement the Directives. National regulations might differ in their interpretation of the Directives; always refer to the regulations of the country in which the work is located. Also, please note that there are vibration-related laws and/or regulations in countries outside of the European Union.

Please note that nothing in this booklet should be construed as legal advice or relied upon to help you comply with any laws or regulations. Please consult an attorney and other local technical experts for advice and to help you to comply with any applicable laws and regulations.

1) Manufacturers are obliged by the European Union Machinery Directive to state the three-axes vibration emission value in the documentation supplied with the machine. Read more on pages 14–15.

Convert a single-axis vibration emission value to a three-axes vibration emission value

As of December 29, 2009 (the effective date of the Machinery Directive 2006/42/EC), manufacturers are required to provide three-axes vibration (as opposed to earlier single-axis) emission values for their machines that are placed into the market. However, due to the fact that there will still be many machines that were put into the market prior to December 29, 2009 (for example, machines that are rented by employers), it is likely that the operator's instructions (which were published before December 29, 2009) for such equipment will in many cases contain single-axis vibration emission values.

In cases where only a single-axis value is provided in the operator's instructions, the technical report CEN/TR 15350:2006[2] presents a method of estimating the three-axes value by applying a correction factor (c). Depending on the characteristics of the tool, the factor varies between 1.5 and 2.0:

Estimated three-axes vibration value = factor (c) • single-axis value

Example:

If the single-axis vibration level for a certain machine is given as 2.5 m/s^2 and the technical report states that with this type of machine the correction factor should be 2.0, the estimated three-axes vibration level will be 5.0 m/s^2. 2.5 m/s^2 • 2.0 = 5.0 m/s^2.

It is important to bear in mind that these correction factors are generalizations and should be used only for making rough estimates and are not adequate for risk use in risk assessments.

2) published by the European Committee for Standardization (European Normalization, CEN)

European Machinery Directive 2006/42/EC

Declaration of vibration emission values

According to the European Machinery Directive 2006/42/EC, the manufacturer is obliged to present the single-axis vibration emission value in the product information delivered with the tool. If the value is below 2.5 m/s^2, this fact must be stated. If the value is above 2.5 m/s^2, the actual value must be given. These values are measured in laboratory conditions.

For our handheld machines you will find vibration emission values in the operator's instructions.

The vibration emission value may be helpful for employers to:

- Compare different manufacturers' products within the same class, thereby helping them to identify (and avoid) any machines that have unusually high vibration emissions.
- Identify any significant differences between the vibration emissions of different machines which are, in other respects, suitable for a particular task.
- Conduct rough estimates of vibration exposure to workers in connection with the employer's responsibility to assess risks to their workers, including under the Vibration Directive (discussed further below).

Evaluate a specific working situation

In connection with an employer conducting an evaluation of a specific working situation, it may sometimes be necessary for the employer to perform an on-site three-axes measurement, since the conditions in each working situation will be specific.

The ISO standard ISO 5349 contains guidelines on how to perform three-axes measurements of hand-arm vibration exposure of an operator in a real work situation. These can be complicated and costly to perform and such measurements are not normally necessary for making an initial risk assessment on a work site/task.

We provide examples of three-axes vibration emission values for our vibration-reduced machines that are representative approximations of real use. You will find them under "Additional vibration information" in the operator's instructions.

The above-mentioned values published are approximations of the vibration emission levels of the machine when working in the most common materials for each machine type (for example concrete and asphalt for a breaker, and granite for a rock drill) within the range of intended and normal use.

Please note that the published emission values should be considered only as approximations and should not be considered adequate for purposes of risk assessment (although an employer might determine that the published emission values are useful for the employer in making rough estimates in connection with assessing vibration exposure risks to its workers).

EU and other local regulations

National laws relating to vibration levels

ACME Construction

European Union Directive 2002/44/EG (often referred to as the "Physical Agents Directive" or the "Vibrations Directive") and national laws of EU member countries implementing the 2002/44/EC Directive impose various requirements on the machine operator's employer relating to employee's exposure to vibrations. See page 16 of this booklet for a brief overview.

Atlas Copco

The Machinery Directive requires Atlas Copco to, among other things, state the vibration value in the manual and technical documentation for the machine. See page 14 of this booklet for a brief overview.

EU Directive 2006/42/EC (the "Machinery Directive"), and national laws of EU member countries implementing the Machinery Directive, impose many requirements on Atlas Copco and other manufacturers. Among other things the Machinery Directive requires the manufacturer to state the vibration value in the machine's manual and technical documentation.

Various ISO international standards provide rules regarding how the manufacturer should measure vibrations. Generally, a specific standard applies to a specific group of machinery.

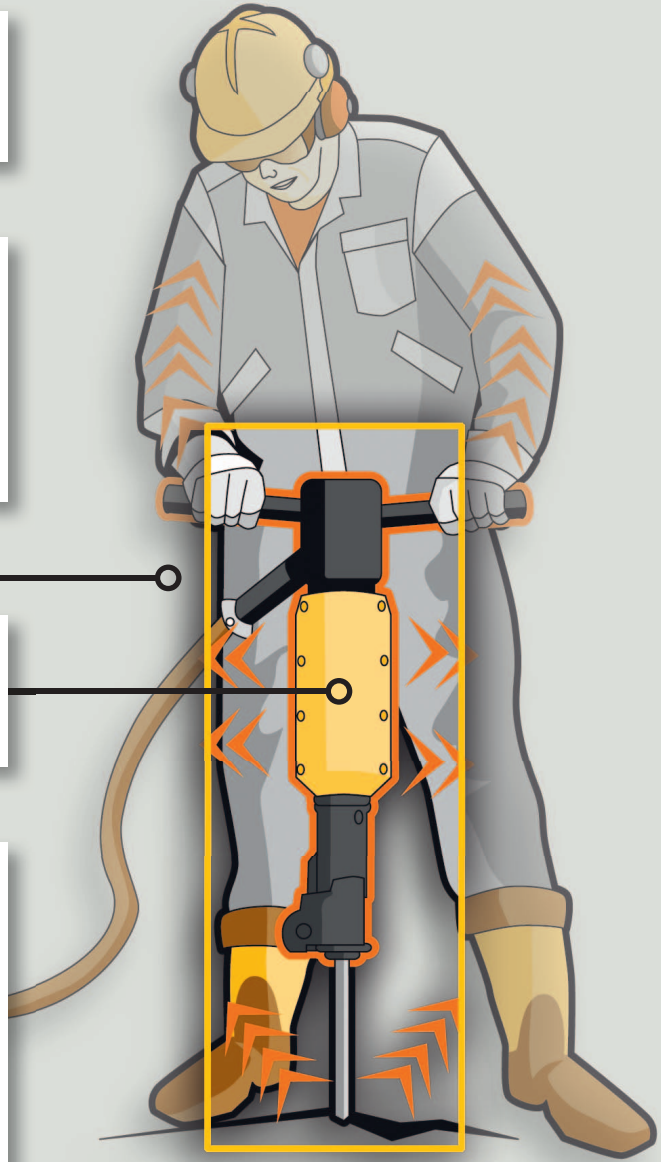

European Vibration Directive 2002/44/EC

Another European Directive that is part of the regulatory framework in Europe is the Physical Agents Directive 2002/44/EC. It is the responsibility of the employer to make sure that these regulations are followed at their work sites.

In June 2002, the European Union published the Physical Agents Directive, 2002/44/EC (often referred to as the "Vibration Directive"). Among other things, the Vibration Directive places requirements on employers to ensure that risks from vibration are eliminated or reduced to a minimum. In connection with this, the Vibration Directive establishes minimum standards for employers to control the risks to workers from vibration. The vibration regulations set:

1. An exposure action value ("EAV") for daily vibration exposure of 2.5 m/s², above which employers are required to implement measures to control the hand-arm vibration risks of their workforce;
2. A daily exposure limit value ("ELV") of 5 m/s², above which workers must not be exposed.

The exposure action value and exposure limit value are each standardized to an eight-hour reference period.

Although the risk of injury or disorders may be reduced where exposures are below the Exposure Action Value, there may still be a risk of injury or disorders at lower exposure levels. Adherence to the Vibration Directive and its Exposure Action Value and Exposure Limit Value requirements does not ensure that workers will not develop injury or disorders from vibration, some of which may be permanent.

The Vibration Directive requires, among other things, employers to identify and assess hazards relating to vibration exposure. The employer must inform employees of any risk identification and assessment, and of subsequent protective measures taken. Other responsibilities of the employer include a requirement to provide instructions and training to employees, and to carry out health surveillance of employees who are exposed to vibration above the EAV or who are considered to be at risk for any other reason.

Relation between vibration and exposure level

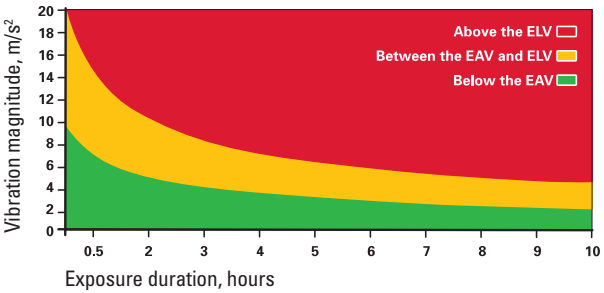

The Exposure Limit Value (ELV) is 5 m/s² $A^{(8)}$
The red area = immediate action to stop

The Exposure Action Value (EAV) is 2.5 m/s² $A^{(8)}$
The yellow area = establish an action plan

Estimation of daily vibration exposure by calculating $A^{(8)}$ values

How to calculate the $A^{(8)}$ value

The daily vibration exposure, $A^{(8)}$, for a worker operating one machine can be calculated from a three-axes emission value and an exposure time by using the equation:

$$A^{(8)} = a_{hv} \sqrt{\frac{T}{T_0}}$$

Where:

a_{hv} = 3-axes vibration emission value for the machine (in m/s²)
T = the time the operator is exposed to the vibrations
T_0 = the reference value of duration – eight hours

What is $A^{(8)}$?

$A^{(8)}$ is a calculated value that sums up all the vibrations from different machines used over a full day of work. If the $A^{(8)}$ value is above 2.5 m/s^2, the Vibration Directive requires that the employer must establish an action plan to reduce exposure to vibration.

If the $A^{(8)}$ value is over 5 m/s^2, the Vibration Directive requires that the employer must take immediate action to stop further exposure, find out why the limit was exceeded and ensure that it does not occur again.

Note: Our declared vibration emission values are obtained by laboratory type testing in accordance with stated standards and are suitable for comparison with the declared values of other tools tested in accordance with the same standards. The declared values are not adequate for use in risk assessments, and values measured in individual workplaces may be higher. The actual exposure values and risk of harm experienced by an individual user are unique and depend upon the way the user works, the workpiece and the workstation design, as well upon the exposure time and the physical condition of the user.

We cannot be held liable for the consequences of anyone using the declared values, instead of values reflecting the actual exposure, in an individual risk assessment in a workplace situation over which we have no control.

Use of construction machines may cause hand-arm vibration syndrome if their use is not adequately managed. An EU guide to managing hand-arm vibration can be found at http://www.humanvibration.com/EU/VIBGUIDE.htm

We recommend a program of health surveillance to detect early symptoms which may relate to vibration exposure, so that management procedures can be modified to help prevent future impairment.

Please note: Some people get confused and mistakenly think that the vibration emission value for the machine is the same thing as the daily exposure action value (EAV) or daily exposure limit value (ELV). This confusion is often caused by the fact that the vibration value for the machine and the daily exposure action value (EAV) and the daily exposure limit value (ELV) all use the unit m/s^2 (meters per square second).

Determination of vibration exposure points from the equivalent vibration total value and the associated exposure duration

Equivalent vibration total value $a_{hv,eq}$ m/s²	Exposure duration T									
	0.1 h	0.2 h	0.5 h	1 h	2 h	3 h	4 h	5 h	6 h	8 h
	6 min	12 min	30 min	60 min	120 min	180 min	240 min	300 min	360 min	480 min
2.5	1	3	6	13	25	38	50	63	75	100
3	2	4	9	18	36	54	72	90	108	144
3.5	2	5	12	25	49	74	98	123	147	196
4	3	6	16	32	64	96	128	160	192	256
4.5	4	8	20	41	81	122	162	203	243	324
5	5	10	25	50	100	150	200	250	300	400
5.5	6	12	30	61	121	182	242	303	363	484
6	7	14	36	72	144	216	288	360	432	576
6.5	8	17	42	85	169	254	338	423	507	678
7	10	20	49	98	196	294	392	490	588	784
7.5	11	23	56	113	225	338	450	563	675	900
8	13	26	64	128	256	384	512	640	768	1024
8.5	14	29	72	145	289	434	578	723	867	1156
9	16	32	81	162	324	486	648	810	972	1296
9.5	18	36	90	181	361	542	722	903	1083	1444
10	20	40	100	200	400	600	800	1000	1200	1600
10.5	22	44	110	221	441	662	882	1103	1323	1764
11	24	48	121	242	484	726	968	1210	1452	1936
11.5	26	53	132	265	529	794	1058	1323	1587	2116
12	29	58	144	288	576	864	1152	1440	1728	2304
12.5	31	63	156	313	625	938	1250	1563	1875	2500
13	34	68	169	338	676	1014	1352	1690	2028	2704
13.5	36	73	182	365	729	1094	1458	1823	2187	2916
14	39	78	196	392	784	1176	1568	1960	2352	3136
14.5	42	84	210	421	841	1262	1682	2103	2523	3364
15	45	90	225	450	900	1350	1800	2250	2700	3600
15.5	48	96	240	481	961	1442	1922	2403	2883	3844
16	51	102	256	512	1024	1536	2048	2560	3072	4096
16.5	54	109	272	545	1089	1634	2178	2723	3267	4356
17	58	116	289	578	1156	1734	2312	2890	3468	4624
17.5	61	123	306	613	1225	1838	2450	3063	3675	4900
18	65	130	324	648	1296	1944	2592	3240	3888	5184
18.5	68	137	342	685	1369	2054	2738	3423	4107	5476
19	72	144	361	722	1444	2166	2888	3610	4332	5776
19.5	76	152	380	761	1521	2282	3042	3803	4563	6084
20	80	160	400	800	1600	2400	3200	4000	4800	6400

Source:
CEN/TR 15350:2006
"Mechanical vibration – Guidelines for the assessment of exposure to hand-transmitted vibration using available information, including that provided by manufacturers of machinery"

Estimation of daily vibration exposure using the point system

What is the point system?

Operators commonly use several different handheld machines during a single working day. A method frequently used by employers to simplify the estimation of daily vibration exposure is the point system. Under this system, exposure levels for different combinations of vibration magnitude and exposure time are normally given in exposure points instead of values in m/s^2 $A^{(8)}$. You may find the exposure points easier to work with than the $A^{(8)}$ values:

- Exposure points change simply with time: twice the exposure time, twice the number of points.
- Exposure points can be added together, for example, where a worker is exposed to two or more different sources of vibration in a day.
- The Exposure Action Value (2.5 m/s^2 $A^{(8)}$) is equal to 100 points.
- The Exposure Action Value (5 m/s^2 $A^{(8)}$) is equal to 400 points.

The graph opposite illustrates how vibration magnitude affects the exposure time, regulated by the European Vibration Directive, that can be allowed. The colours represent the Exposure Action Value and the Exposure Limit Value, defined in the European Vibration Directive. The number in each square is the points accumulated by working with a certain machine, with a certain declared vibration emission value, during a certain time (effective trigger time). An employer might determine that this is a good way to keep track of the total daily exposure if operators are working with several handheld machines during a typical working day in connection with the employer's responsibilities to ensure that vibration exposure remains within the limits specified by the European Vibration Directive 2002/44/EC. When using several machines on the same working day, the total vibration exposure points, PE tot, can be estimated by the employer by adding up the vibration exposure points of the individual machines.

Example:

During one eight-hour working day, an operator starts by breaking concrete with a TEX 150PE pneumatic hammer for approximately one hour. Following that, he uses the same breaker on an asphalt pavement for a total of thirty minutes trigger time. The employer, who has determined that the above mentioned point system is useful in connection with the employer's responsibilities under the European Vibration Directive, would like to estimate the operator's daily exposure to vibration. A TEX 150PE will, according to the Operator's Instructions produce (in normal intended use) an average hand-arm weighted three-axes value of 4.4 m/s^2 when working in concrete and 4.0 when working in asphalt.

These values were obtained in what Atlas Copco believes to be normal intended use. However, the vibration emission values vary greatly with task, operator technique and other factors. Therefore these values should be used with caution and verified with actual measurements wherever possible, since the values experienced during the task at hand, may be much higher. This depends on the way the user works, the material in which the machine is used, the physical condition of the user and the condition of the machine.

If the employer enters these values in the graph, the employer arrives at almost 41 points for the concrete breaking and 16 points for the asphalt. The sum of points during this eight-hour working day is therefore 57 points. This is still in the green area in which case the daily Exposure Action Value (defined in the European Vibration Directive) is not exceeded.

Please note that it is only the employer or the operator who can make the above risk assessment. They are the only ones with the knowledge of the actual working conditions on the worksite.

Atlas Copco Construction Tools expresses no opinion with regard to CEN Technical Report CEN/TR 15350:2006 or use or not use thereof. It is up to the employer (or operator) to determine whether the CEN Technical Report 15350:2006 is appropriate or useful.

WARNING

Regular and frequent exposure to hand-arm vibration may cause, contribute to, or aggravate injury or disorders to the operator's fingers, hands, wrists, arms, shoulders and/or other body parts, including debilitating and/or permanent injuries or disorders that may develop gradually over periods of weeks, months, or years. Such injury or disorder may include vascular injuries, neurological injuries, and musculoskeletal injuries and possibly damage to other body structures.

Part of this booklet discusses risk reduction steps that you can take to help you reduce vibration exposure risks (see "How you can reduce the risk", on page 11).